Analog input board, optically isolated, 4 differential inputs, 16-bit

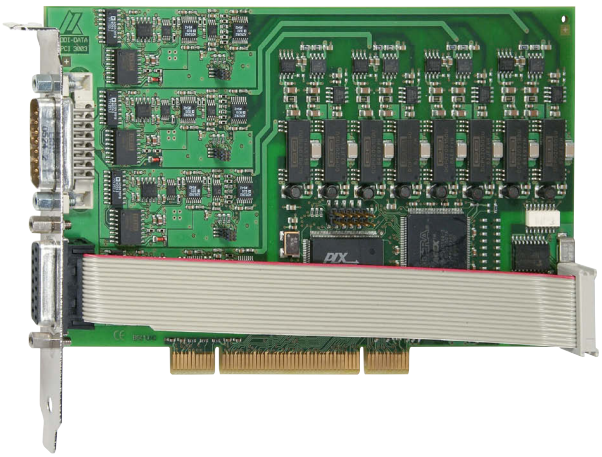

APCI-3003

PCI 3.3 V or 5 V

Optical isolation between all channels

4 differential inputs, 16-bit resolution

Simultaneous acquisition on all channels

400 kHz throughput per channel

PCI DMA, programmable gain

Trigger functions

8 optically isolated digital I/O, 24 V

RoHS 2002/95/EC

PCI 32-bit

Windows 64/32-bit drivers

LabVIEW™

LabWindows/CVI™

Customer-tailored modifications designed to suit your needs. Hardware and software, firmware, PLDs, ... Contact us!

With the fast analog input board APCI-3003 you can achieve high transfer rates with a simultaneous conversion of 4 channels.
The board has 4 differential inputs, each channel has its own A/D converter.
All 4 inputs are optically isolated from each other up to 1000 V.

Features

- PCI 3.3 V or 5 V
- Data acquisition independent from PCI clock

Analog inputs

- 4 differential inputs
- 16-bit resolution
- Throughput: 400 kHz per input
- Simultaneous conversion of 4 channels
- Input voltage: 0-10 V, ± 10 V, 0-5 V, ± 5 V, 0-2 V, ± 2 V, 0-1 V, ± 1 V, freely programmable through software for each channel
- Current inputs: 0-20 mA (option) can be combined freely with voltage inputs
- Gain PGA x1, x2, x5, x10 freely programmable through software for each channel

Analog acquisition

- Different input modes for the analog acquisition:
  1) Simple mode
  2) Scan modes
  3) Sequence modes
  4) Auto Refresh mode
- Trigger functions:
  - software trigger or
  - external trigger: the analog acquisition (single or sequence) is started through the signal on digital input 0 from 0 V to 24 V
- Onboard FIFO (for 512 analog values)
- PCI-DMA

Digital

- 24 V digital I/O enable a high interference distance and a long distance between signal transmitter and data acquisition
- 4 digital inputs, 24 V, optically isolated
- 4 digital outputs, 24 V, optically isolated

Timer

- 1, 12-bit
- Timer as cyclic time counter

Safety features

- For more protection in noisy industrial environment
- Optical isolation 1000 V min.
- Creeping distance IEC 61010-1
- Overvoltage protection ± 40 V
- Protection against high-frequency EMI
- Input filters
- Noise neutralisation of the PC supply

Applications

- Industrial process control
- Industrial Measurement and monitoring
- Multichannel data acquisition
- Control of chemical processes
- Factory automation
- Acquisition of sensors
- Laboratory equipment
- Current measurement
- Instrumentation

Software drivers

A CD-ROM with the following software and programming examples is supplied with the board.

Standard drivers for:

- Linux
- 32-bit drivers for Windows 8 / 7 / Vista / XP / 2000
- Signed 64-bit drivers for Windows 8 / 7 / XP
- Real-time use with Linux and Windows on request

Drivers and samples for the following compilers and software packages:

- .NET
- Microsoft VC++ • Borland C++
- Visual Basic • Delphi
- LabVIEW • LabWindows/CVI

ADDIPACK functions:

Analog input • Digital input • Digital output • Timer

On request:

Further operating systems, compilers and samples.

Driver download: www.addi-data.com, download menu

AGT Absolute Gauge Technologies™
Presented by: Absolute Gauge Technologies
sales@absolutegauge.com; www.absolutegauge.com,
Toronto: 416 754 3168, Montreal: 514 695 5147, Toll Free: 1 888 754 7008

ADDI-DATA® SPIRIT OF EXCELLENCE

Specifications

Analog inputs

Number of inputs:	4 differential inputs
resolution:	16-bit
Optical isolation:	1000 V through opto-couplers from PC to peripheral
Input ranges:	Software-programmable for each channel 0-10 V, ±10 V, 0-5 V, ± 5 V, 0-2 V, ± 2 V, 0-1 V, ± 1 V 0-20 mA optional
Gain:	Software programmable (x1, x2, x5, x10)
Throughput:	400 kHz per input
Trigger:	Through software, timer, external event (24 V input)
Data transfer:	Data to the PC through FIFO memory, Interrupt at EOC (End Of Conversion), DMA transfer at EOC
Interrupts:	End of conversion, at timer overrun, End of scan

Digital I/O

Number of I/O channels:	4 digital inputs, 24 V, 4 digital outputs, 24 V, 50 mA typ., Open Collector
Logical "0" level:	0-13 V
Logical "1" level:	16-30 V
Optical isolation:	1000 V through opto-couplers from PC to peripheral

EMC – Electromagnetic compatibility

The product complies with the European EMC directive. The tests were carried out by a certified EMC laboratory in accordance with the norm from the EN 61326 series (IEC 61326). The limit values as set out by the European EMC directive for an industrial environment are complied with. The respective EMC test report is available on request.

Physical and environmental conditions

Dimensions:	175 x 99 mm
System bus:	PCI 32-bit 3.3/5V acc. to specification 2.2 (PCISiG)
Space required:	1 PCI slot for analog inputs, 1 slot opening for digital I/O
Operating voltage:	+5 V, ±5 % from the PC
Current consumption:	1.55 A typ.
Front connector:	15-pin D-Sub male connector for analog inputs 15-pin female connector for digital I/O
Temperature range:	0 to 60 °C (with forced cooling)

Simplified block diagram

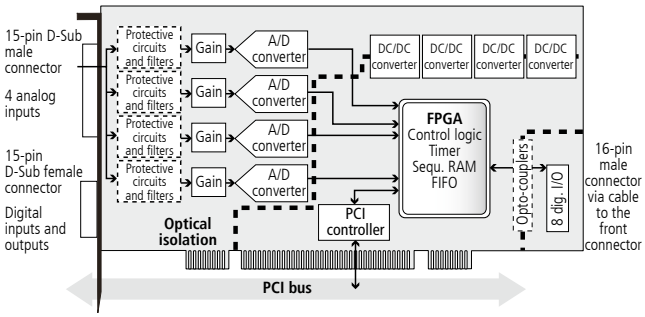

Pin assignment analog – 15-pin D-Sub male connector

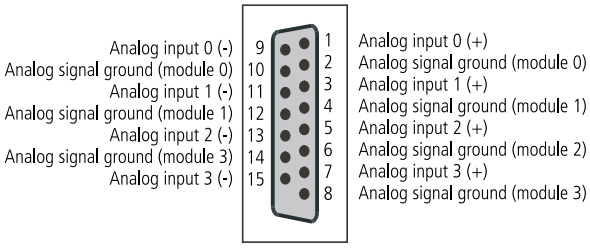

Pin assignment digital – 15-pin D-Sub female connector

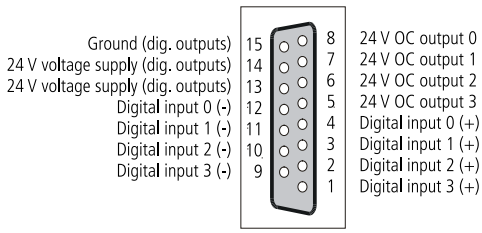

ADDI-DATA connection

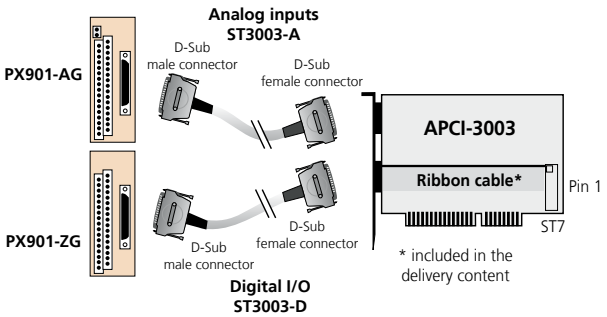

Ordering information

APCI-3003

Analog input board, optically isolated, 4 differential inputs, 16-bit.
Incl. technical description and software drivers

Versions

APCI-3003: 4 differential inputs, simultaneous acquisition, 8 digital inputs and outputs, 24 V

Options

Please indicate the number of channels

Option PC-Diff: Current input for 1 differential channel 0(4)-20 mA

Option DF: Precision filter for 1 channel

Accessories

PX901-AG: Screw terminal panel with transorb diodes, with housing for DIN rail for connecting the analog inputs

ST3003-A: Shielded round cable, connection to PX-901-AG

PX901-ZG: Screw terminal panel for connecting the digital I/O, for DIN rail

ST3003-D: Shielded round cable, connection to PX-901-ZG

AGT Absolute Gauge Technologies™
Presented by: Absolute Gauge Technologies
sales@absolutegauge.com; www.absolutegauge.com,
Toronto: 416 754 3168, Montreal: 514 695 5147, Toll Free: 1 888 754 7008