THE600

Model		THE600
Arm length (1st Arm + 2nd Arm)		600 mm (325 mm+275 mm)
Working envelope	Axis 1	±140 deg
	Axis 2	±152 deg
	Axis 3 (Axis Z)	0~210 mm
	Axis 4 (Axis C)	±360 deg
Maximum speed	Axis 1	457 deg/sec
	Axis 2	672 deg/sec
	Axis 3 (Axis Z)	2000 mm/sec
	Axis 4 (Axis C)	2359 deg/sec
	Composite (Axis 1 and 2 composite)	8000 mm/sed
Standard cycle time *1		0.31 sec (with 2 kg load)
Maximum payload mass *2		12 kg (rated 2 kg)
Allowable moment of inertia *2		0.25 kg·m^2
Positioning repeatability *3	X-Y	±0.01 mm
	Axis Z (Axis 3)	±0.01 mm
	Axis C (Axis 4)	±0.005 deg
Hand wiring		8 inputs and 8 outputs
Hand pneumatic joint		ϕ6 x 4 pcs
Robot controller cable		3.5 m
Power supply		4.3 kVA
Mass		31 kg
Connectable controller		TS5000-MS, TS5000-EMS

For *1 to *3, please see page 8.

External View

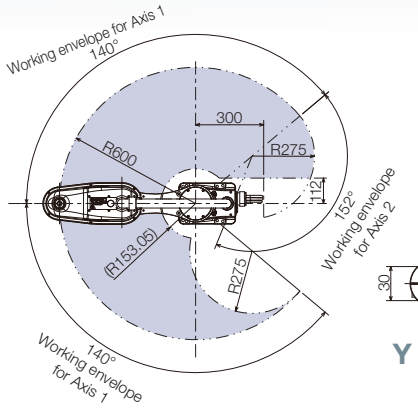

Working envelop for config lefty

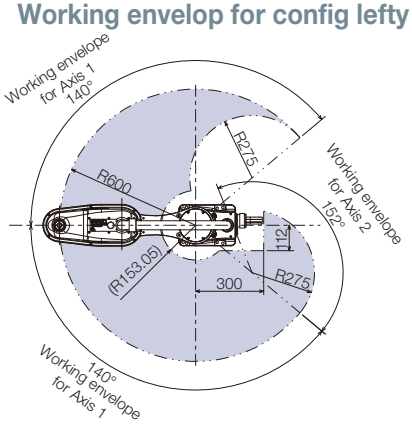

Working envelope for config righty

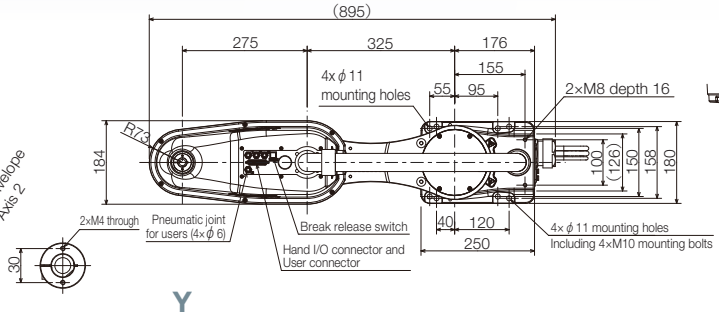

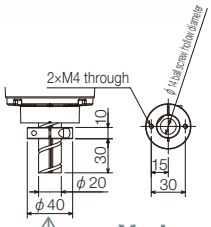

X view

X

Z View
Detail view of EOAT

Y view

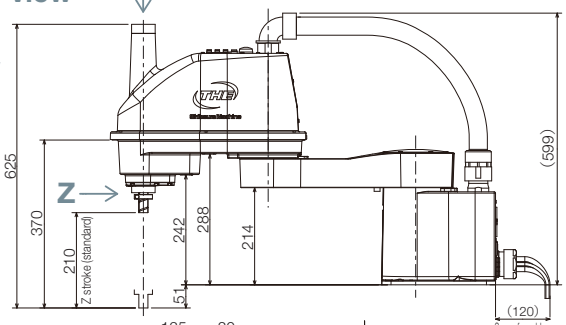

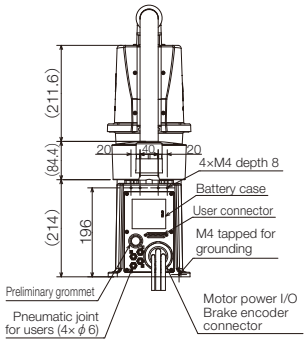

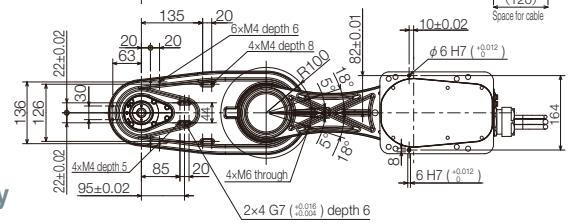

AGT Absolute Gauge Technologies™
Presented by: Absolute Gauge Technologies
sales@absolutegauge.com; www.absolutegauge.com,
Toronto: 416 754 3168, Montreal: 514 695 5147, Toll Free: 1 888 754 7008