AGT Absolute Gauge Technologies™
Presented by: Absolute Gauge Technologies
sales@absolutegauge.com; www.absolutegauge.com,
Toronto: 416 754 3168, Montreal: 514 695 5147, Toll Free: 1 888 754 7008

Sensor principle		MH-C	MH-C2
Electrical data			
Measuring range	°	0 ... 360	-
Indep. linearity	% of meas. range	±0.3	-
Max. hysteresis	°	0.1	-
Resolution	bit	14	-
Max. repeatability	°	0.1	-
Sample rate fast mode	kHz	2.2	-
Sample rate slow mode	kHz	(0.55)	
System propagation delay fast mode	µs	400	-
System propagation delay slow mode	µs	(600)	-
Max. temperature coefficient of the output signal	ppm/°K	25	-
MTTFd / MTBF	years	668 / 668	-
Power supply voltage	VDC	5 (±10 %)	-
Current consump. without load (typ.) fast mode	mA	14	-
Current consump. without load (typ.) slow mode	mA	(9)	-
Reverse polarity protection of power supply		yes	-
Electrical connection		Ribbon cable 6pole	-
Cross section of single wires	mm²	0.25 (AWG24)	-
Redundancy feasible		no	-
Mechanical data			
Mechanical range	°	360 (continuous)	-
Protection class		IP54 / IP65	-
Max. starting torque at spec. protection class	Ncm	0.5 / 3	-
Max. rotating speed	rpm	6000	-
Min. life	movements	360 Mio.	-
Max. permitted axial shaft load	N	5	-
Max. permitted radial shaft load	N	5	-
Operating & Storage temperature	°C	-40 ... +105	-
IEC 68-2-6 Vibration (Amax = 0.75mm, f = 5 … 2000 Hz)	g	20	-
IEC 68-2-27 Shock	g	50	-
Standards			
EN 55022 class B, Emission radiated (30... 230 MHz)	dB(µV/m)	max. 30	-
EN 55022 class B, Emission radiated (230...1000MHz)	dB(µV/m)	max. 37	-
EN 61000-4-2, ESD (contact discharge / air discharge)	kV	±4 / ±8	-
EN 61000-4-3, Immission HF radiated (80... 1000 MHz)	V/m	100	-
EN 61000-4-4, Burst (on all lines)	kV	±1	-
EN 61000-4-5, Surge (lines to ground)	kV	±1	-
EN 61000-4-6, Immission HF conducted (0.15...80MHz)	Vemk	10	-
EN 61000-4-8, Immission magnetic field (50Hz)	A/m	300	-
IEC 60393-1 Insulation resistance (500VDC, 1bar, 2s)	GOhm	20	-
IEC 60393-1 Dielectric strength (VAC, 50Hz, 1min, 1bar)	kV	1	-

Vert-X 13 - 5V / SPI

Applications
- Servodrives
- Insetting machines
- Sewer inspection robots
- Medical applications

Features
- Compact dimensions
- Contactless measuring method
- Long life
- High accuracy of measurement
- Use in cramped installation conditions
- Full resolution and accuracy at programmed electrical angle

Errors and omissions excepted. Subject to change without notice. State: 25.02.14

Contelec AG
Portstrasse 38
CH-2503 Biel/Bienne
Phone +41 (0)32 3665600
Telefax +41 (0)32 3665604
sales@contelec.ch

CONTELEC
A company of the Siedle-Group

AGT Absolute Gauge Technologies™
Presented by: Absolute Gauge Technologies
sales@absolutegauge.com; www.absolutegauge.com,
Toronto: 416 754 3168, Montreal: 514 695 5147, Toll Free: 1 888 754 7008

Vert-X 13 - 5V / SPI
Ordering code

Output characteristics

Positive gradient CW	Standard	1
Positive gradient CCW	Optional	2
Redundant, positive gradient CW	Optional	3
Redundant, positive gradient CCW	Optional	4
Redundant, crossed signal curves	Optional	5

Output signal

SPI	Standard	8

Power supply voltage

5VDC	Standard	2

Electrical connection

1	Standard	Ribbon cable 6pole
9	Optional	Special cable

Length of ribbon cable

01	Optional	10cm
02	Standard	20cm
03	Optional	30cm
04	Optional	40cm
05	Optional	50cm
99	Optional	Special length

Vert-X	1	3	0	2		7	3	6		2	8	1		1	0	2

Electrical angle

36	Standard	Electrical angle 360°
xx	Optional	10 to 35; Declaration in 10° steps
99	Optional	Special angle

Sensor principle

7	MH-C

Mechanical version

1302	Standard	Bushing M10x0,75 ; 3,175mm shaft slotted ; ball bearing ; IP54
1312	Optional	Servo mount ; 3,175mm shaft slotted ; ball bearing ; IP54
1332	Optional	Bushing M10x0,75 ; 3,175mm shaft slotted ; ball bearing ; IP65
1342	Optional	Servo mount ; 3,175mm shaft slotted ; ball bearing ; IP65
1303	Optional	Bushing M10x0,75 ; 3,175mm shaft slotted ; slide bearing ; IP54
1313	Optional	Servo mount ; 3,175mm shaft slotted ; slide bearing ; IP54
1333	Optional	Bushing M10x0,75 ; 3,175mm shaft slotted ; slide bearing ; IP65
1343	Optional	Servo mount ; 3,175mm shaft slotted ; slide bearing ; IP65
1399	Optional	Special housing ; Special shaft

Options (on request)

	MH-C	MH-C2
Custom shaft design	X	-
Custom modification of the housing	X	-
Custom cable / wires	X	-
Sample rate in fast mode	X	-
Switch functions TTL (max. 2)	-	-
Special characteristic curve	-	-
Special electrical angle within 30 to 360° (ex factory)	X	-
Electrical angle programmable (Software)	-	-
Start & end point settable / programmable (Additional wires or Software)	-	-
Sense of rotation CW/CCW settable / programmable (Additional wires or Software)	-	-
Index point settable / programmable (Additional wires or Software)	-	-

Errors and omissions excepted. Subject to change without notice. State: 25.02.14

Contelec AG
Portstrasse 38
CH-2503 Biel/Bienne
Phone +41 (0)32 3665600
Telefax +41 (0)32 3665604
sales@contelec.ch

CONTELEC
A company of the Siedle-Group

Presented by: Absolute Gauge Technologies
sales@absolutegauge.com; www.absolutegauge.com,
Toronto: 416 754 3168, Montreal: 514 695 5147, Toll Free: 1 888 754 7008

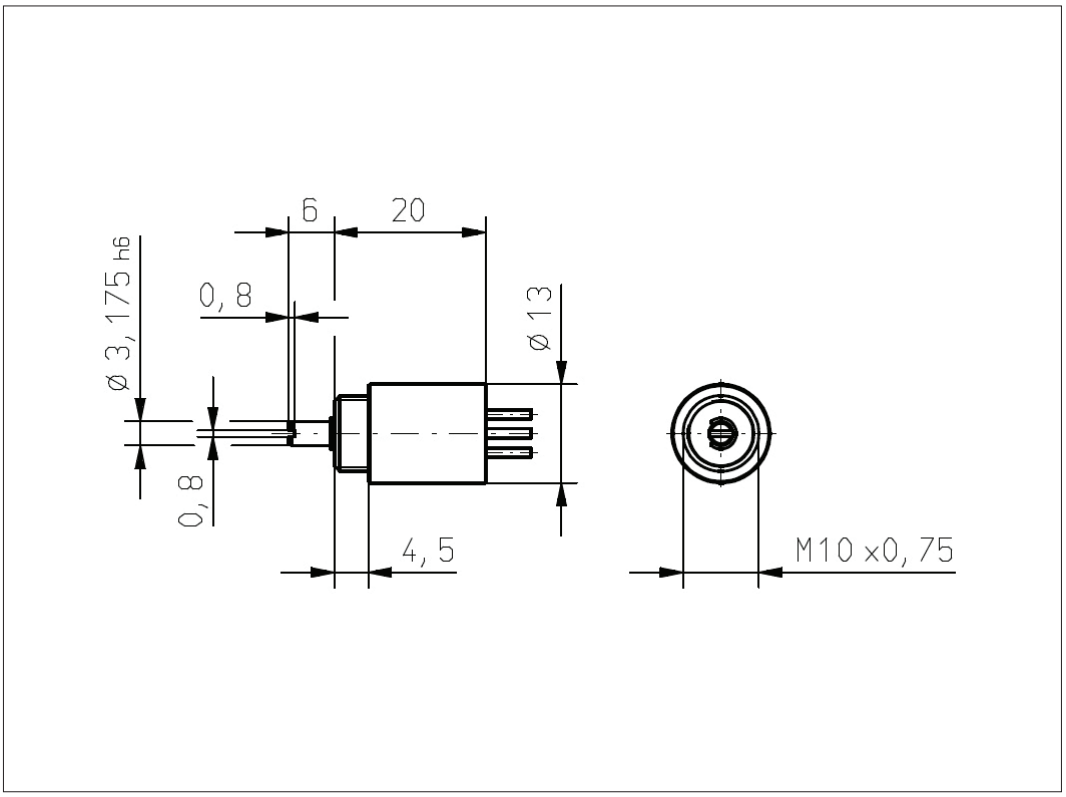

Vert-X 1302
Vert-X 1332
Vert-X 1303
Vert-X 1333

Accessoires (incl.)
- 1x Nut M10x0.75 / SW13
- 1x Serrated lock washer

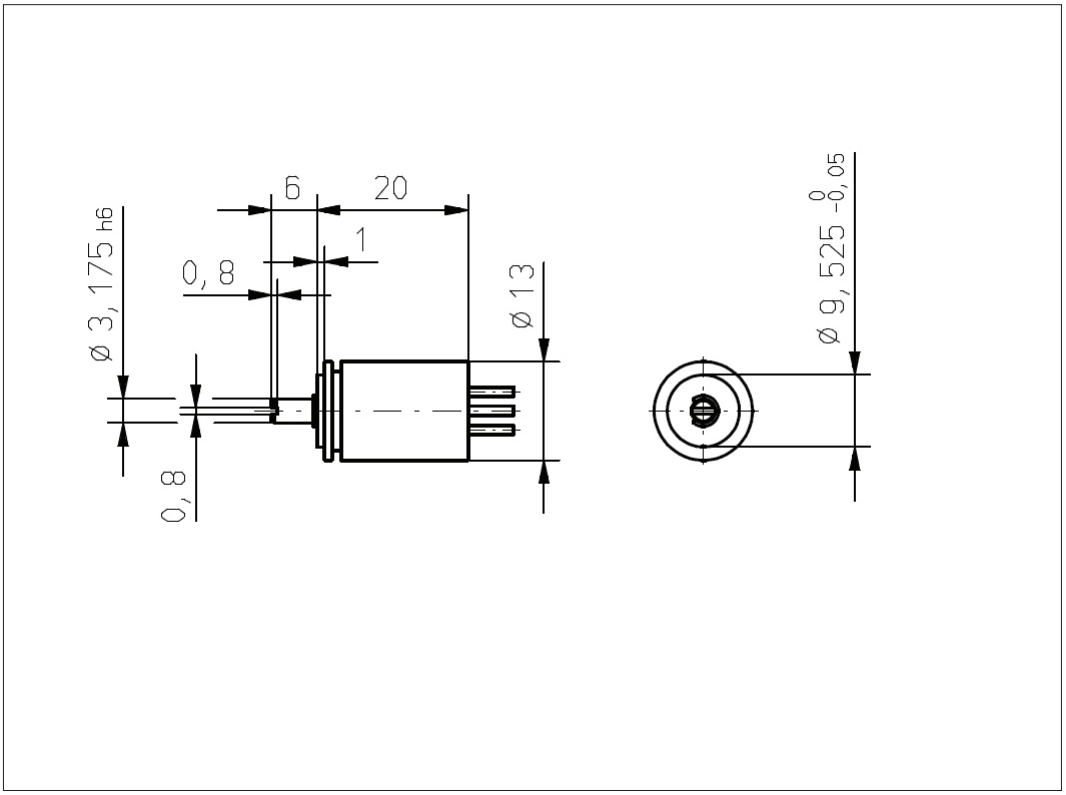

Vert-X 1312
Vert-X 1342
Vert-X 1313
Vert-X 1343

Accessoires (incl.)
- 1x Fixation clip
- 2x Slotted cylinder head screw M3x8

Errors and omissions excepted. Subject to change without notice. State: 25.02.14

Contelec AG
Portstrasse 38
CH-2503 Biel/Bienne
Phone +41 (0)32 3665600
Telefax +41 (0)32 3665604
sales@contelec.ch

CONTELEC
A company of the Siedle-Group

Presented by: Absolute Gauge Technologies
sales@absolutegauge.com; www.absolutegauge.com,
Toronto: 416 754 3168, Montreal: 514 695 5147, Toll Free: 1 888 754 7008

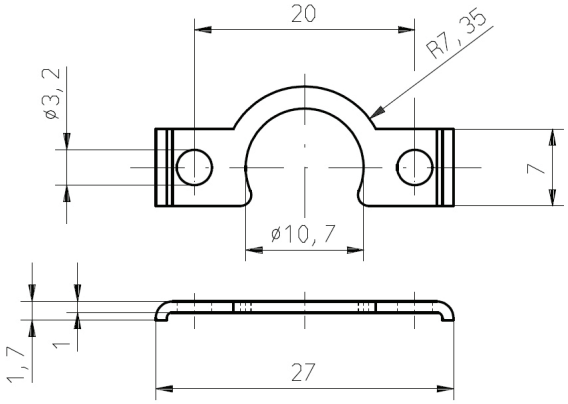

Vert-X 1312
Vert-X 1342
Vert-X 1313
Vert-X 1343

Accessoires
Fixation clip

Errors and omissions excepted. Subject to change without notice. State: 25.02.14

Contelec AG
Portstrasse 38
CH-2503 Biel/Bienne
Phone +41 (0)32 3665600
Telefax +41 (0)32 3665604
sales@contelec.ch

CONTELEC
A company of the Siedle-Group